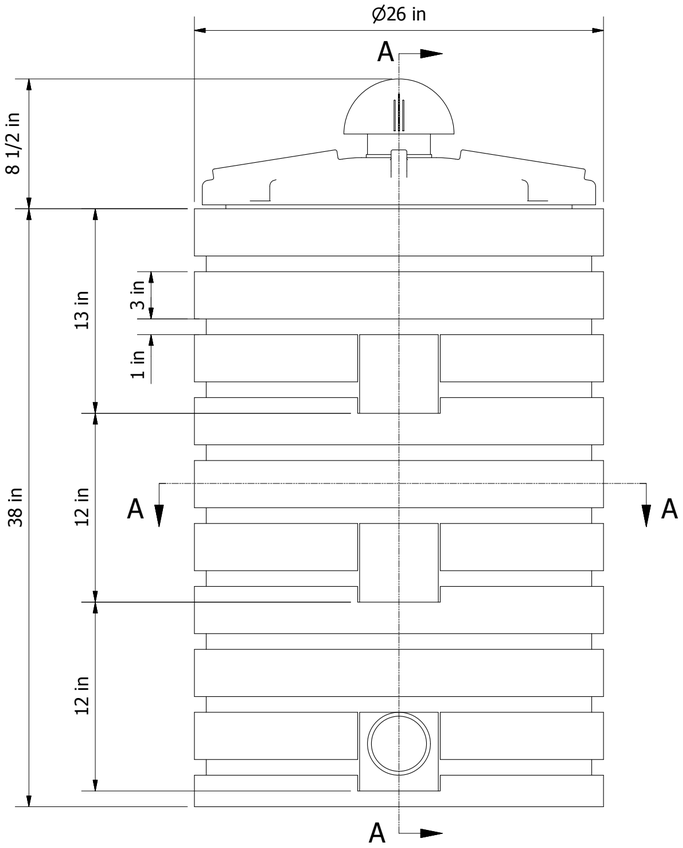

FRONT VIEW
SCALE 1 : 7

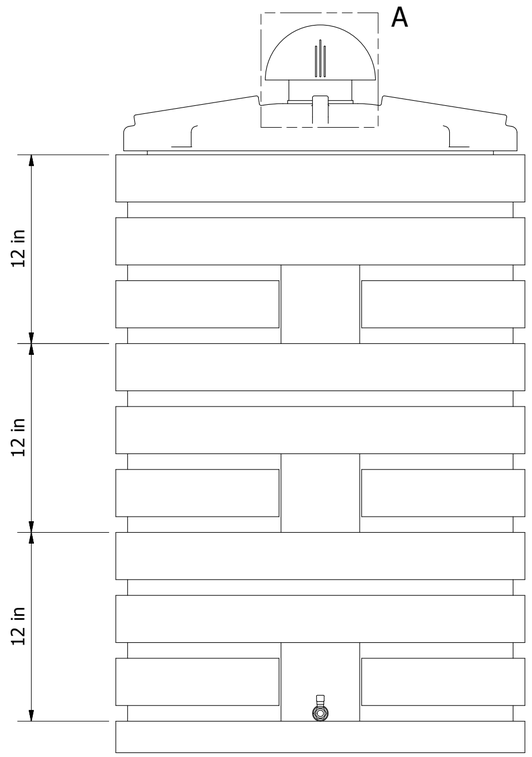

BACK VIEW
SCALE 1 : 7

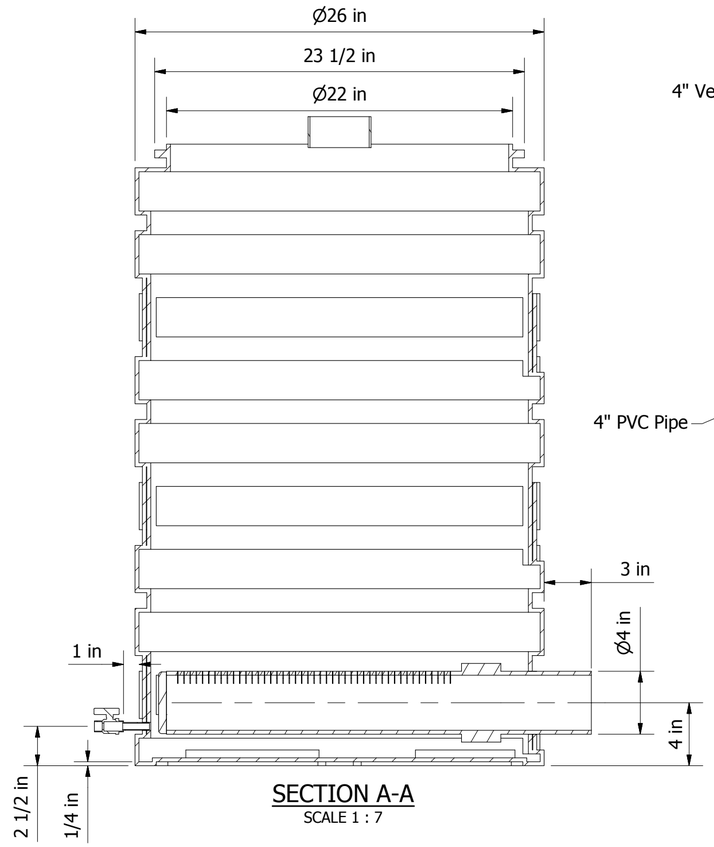

SECTION A-A
SCALE 1 : 7

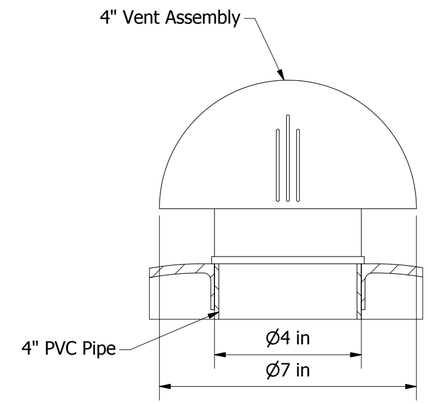

DETAIL A
SCALE 1 : 3

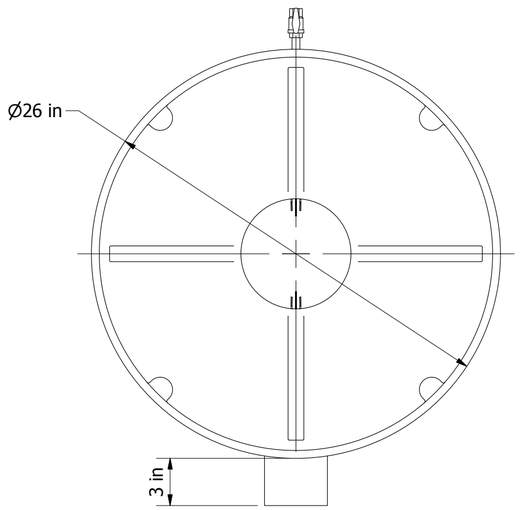

TOP VIEW
SCALE 1 : 7

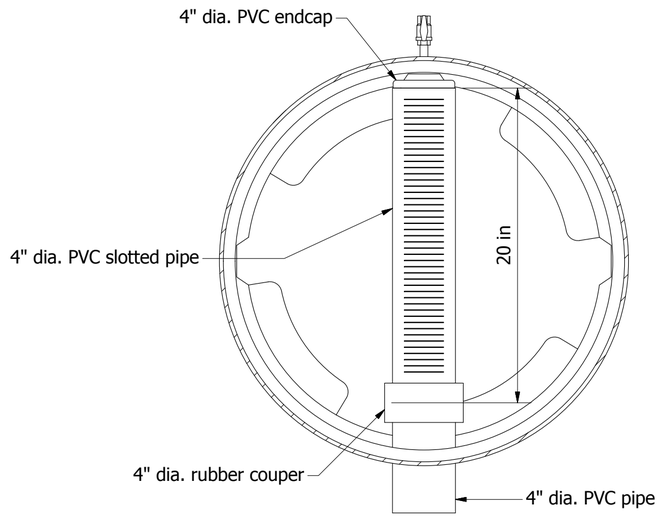

SECTION A-A
SCALE 1 : 7

ISOMETRIC VIEW
SCALE 1 : 10

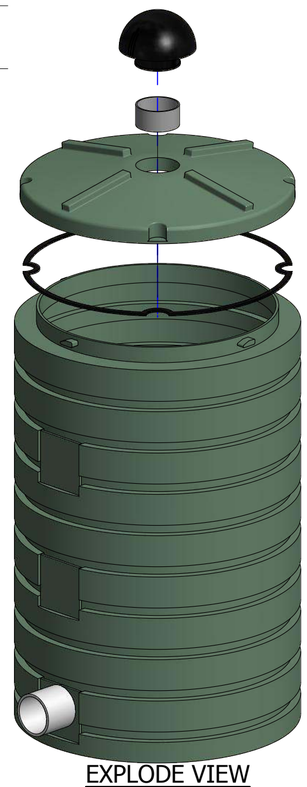

EXPLODE VIEW
SCALE 1 : 10

ANUA
4106 Bernau Avenue -
Greensboro,
NC 27407
Phone : 336-547-9338
Fax : 336-547-8559
Website : www.anuainternational.com

Copyright Anua International LLC
"Copyright and ownership of this drawing is vested in Anua International LLC, whose prior written consent is required for its use, reproduction or for publication to any third party. All rights reserved by the law of copyright and by international copyright conventions are reserved to Anua International LLC and may be protected by court proceedings for damages and/or injunctions and costs."

DRAWING TITLE:	AIRACARB QUANICS BASIN 26" DIA	**DWG No:**	ANU-AC-26-01	**DRAWN BY:**	AIW
PROJECT:		**DATE:**	22/09/2020	**CHECKED:**	SC
CLIENT:		**SCALE:**	AS NOTED	**APPROVED:**	CB

Do not scale directly from drawing ◦ Dimensions are inches " unless stated otherwise ◦ If in doubt, ask!

- DWG STATUS -
PLANNING ☐
TENDER ☐
FOR APPROVAL ☐
FOR CONSTRUCTION ☐
AS BUILT ☐

ISSUE **TBD**

SHEET 1 OF 1 **A2**